VISVESVARAYA TECHNOLOGICAL UNIVERSITY

Jnana Sangama, Belagavi

MINI WINDMILL POWER GENERATION FOR SMART TRAFFIC SIGNAL LIGHTING

SUBMITTED BY

TEJAS SAI	1DT21EE031
SYED UMAR	1DT21EE030
KUNDAN	1DT21EE012
LINGRAJ	1DT21EE014

Under the guidance of

DR. KIRAN.R

Assistant Professor

Mini Project Guide, Dept. of EEE

DSATM, Bangalore

DEPARTMENT OF ELECTRICAL AND ELECTRONICS ENGINEERING

DAYANAND SAGAR ACADEMY OF TECHNOLOGY AND MANAGEMENT

Dayanand Sagar Academy of Technology and Management

Department of Electrical and Electronics Engineering

CERTIFICATE

Certified that the Mini Project Work entitled "MINI WINDMILL POWER GENERATION FOR SMART TRAFFIC SIGNAL LIGHTING" is a bonafide work carried out by Mr. KUNDAN (1DT21EE012), Mr. LINGRAJ (1DT21EE014), Mr. SYED UMAR (1DT21EE030) and Mr. TEJAS SAI (1DT21EE031) in partial fulfillment as per the 21 scheme of subject code 21EEP584 for the completion of the course subject in Electrical & Electronics Dayananda Sagar Academy of Technology and Management during the year 2023-2024. It is certified that all the corrections/suggestions indicated for internal assessment have been incorporated in the report deposited in the departmental library. The Mini Project Report has been approved as it satisfies the academic requirements in respect of the Mini Project Work prescribed for the said degree

Signature of Guide	Signature of HOD	Signature of Principal
Dr.KIRAN.R	Dr K.SHANMUKHA SUNDAR	Dr.M.RAVISHANKAR

SIGNATUR

Name of the Examiners

1.

2.

3.

DECLARATION

We, the undersigned solemnly declare that the Project work report entitled**, "MINI WINDMILL POWER GENERATION FOR SMART TRAFFIC SIGNAL SYSTEM"** is based on our work carried out during the course of our study under the supervision of Dr. KIRAN R Assistant Professor, Department of Electrical and Electronics, Dayananda Sagar Academy of Technology and Management. We assert that the statements made and conclusions drawn are an outcome of the Mini Project work. We further declare that to the best of my knowledge and belief that the Mini Project work report does not contain any part of any work which has been submitted for the award of any other degree in this University or any other University.

Name and Signature

1.

2.

3.

4.

ACKNOWLEDGEMENT

We express our profound gratitude to **Dr. M Ravishankar, Principal, DSATM, Bangalore,** for providing the necessary facilities and an ambient environment to work.

We are grateful to **Dr. K. Shanmukha Sundar, Head of Department, Electrical and Electronics Engineering, DSATM, Bangalore,** for his valuable suggestions and advice throughout our work period.

We would like to express our deepest gratitude and sincere thanks to our guide DR. KIRAN R, Assistant Professor, Department of Electrical and Electronics Engineering, DSATM, Bangalore, **for his keen interest and encouragement in the project whose guidance made the mini project into reality.**

We would like to thank mini project coordinator, Prof. Govindappa R of **Department of Electrical and Electronics Engineering** for his support and encouragement during the course of this mini project.

We would like to thank all the staff members of **Department of Electrical and Electronics Engineering** for their support and encouragement during the course of this mini project.

Finally, we would like to thank our parents, all my family members and friends, without whose help and encouragement this mini project would have been impossible.

ABSTRACT

The proposed project aims to revolutionize urban infrastructure by integrating windmill power generation with smart traffic signal lighting systems. By harnessing wind energy through mini wind turbines and utilizing Arduino microcontroller technology, along with RGB LEDs, the project offers a sustainable and innovative solution for enhancing traffic management and energy efficiency in urban environments.

The key components of the project include mini wind turbines for renewable energy generation, Arduino microcontrollers for intelligent control and monitoring, and RGB LEDs for dynamic and energy-efficient traffic signal lighting. Through careful planning, design, and implementation, the system optimizes energy production, enhances visibility, and enables adaptive responses to changing traffic conditions.

The project's methodology involves needs assessment, component selection, circuit design, Arduino programming, hardware integration, and testing. By following this methodology, it is possible to develop and deploy a robust and reliable system that contributes to energy conservation, environmental sustainability, and improved traffic safety.

In conclusion, the integration of windmill power generation with smart traffic signal lighting systems represents a significant advancement in urban infrastructure technology. By combining renewable energy sources, advanced lighting control capabilities, and intelligent monitoring, the project offers a scalable and cost-effective solution for creating smarter, greener, and safer cities.

CONTENTS

CERTIFICATE ---------- ii

DECLARATION ---------- iii

ACKNOWLEDGEMENT ---------- iv

ABSTRACT ---------- v

CONTENTS ---------- vi

LIST OF FIGURES ---------- viii

CHAPTER-1

1.0Introduction ----------1

1.1 Intension of the project ----------1

1.2 List of Components ----------1

1.3 Component specification ---------- 2

1.1 Arduino Uno ----------

1.2 Dc Generator ---------- 2

1.3 RGB LED----------3

1.4Objective---------- 4

CHAPTER-2

1 Literature Survey ---------- 6

CHAPTER-3

2 Methodology ---------- 8

2.3 Working Principle ----------10

CHAPTER-4

4.1 Circuit Diagram ---------- 11

4.2 Program ---------- 12

CHAPTER-5

5. Expenditure statement ----------16

CHAPTER-6

6. Result ----------17

CHAPTER-7

7. Conclusion ----------19

8. Reference ----------21

LISTOF FIGURES

1. Fig1.3 Arduino Uno ----------2
2. Fig1.3 RGB LED----------3
3. Fig1.3 Dc Generator ---------- 4

CHAPTER1

INTRODUCTION

1.1 Intension of the Project

The intention of the "Mini Windmill Power Generation for Smart Signal Lighting" project is to address the growing need for sustainable and energy-efficient solutions in urban infrastructure, particularly in the context of traffic signal systems. The project aims to harness the power of wind energy through mini wind turbines to generate electricity for powering smart signal lighting systems and is to demonstrate the feasibility and effectiveness of integrating mini windmill power generation with smart signal lighting technology, paving the way for more sustainable and efficient urban infrastructure solutions.

1.2 List of components

- Arduino UNO (microprocessor-omega358)
- DC Generator(0-18 v,3-4 watt)
- RGB LEDs(20ma)
- Windmill blades
- Batteries (7v)

1.3 Specification of the components

Arduino Uno

Figure1.1

- Arduino Uno is a versatile and beginner-friendly microcontroller board that is widely used for prototyping, education, and hobbyist projects due to its ease of use, affordability, and extensive community support. The hardware is shown in the fig 1.1

- It is widely used for IoT applications due to its versatility, low power consumption capabilities, and support for various communication protocols.

- Arduino Uno board serves as a flexible and accessible platform for hobbyists, students, and professionals to experiment with electronics, create interactive projects, and prototype new ideas in a variety of fields including robotics, home automation, IoT (Internet of Things), and more..

Dc Generator

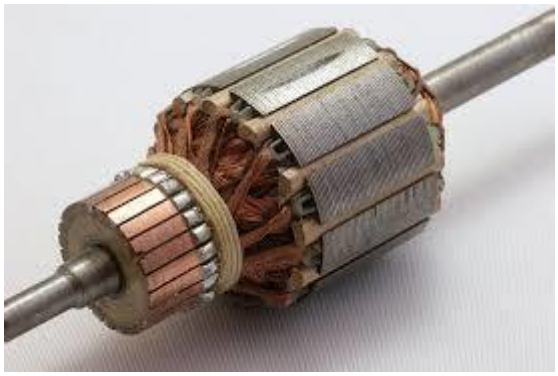

Figure 1.2

- A DC generator, also known as a dynamo, is an electrical machine that converts mechanical energy into direct current (DC) electricity. DC Generator is in the fig 1.2
- It operates on the principle of electromagnetic induction, where a rotating coil or armature cuts through magnetic field lines to induce voltage.
- DC generators are commonly used in various applications such as power generation in small-scale wind turbines, portable generators, and emergency backup systems.
- They consist of essential components like the armature, field winding, commutator, and brushes to facilitate the conversion of mechanical energy to electrical energy.

RGB LED

Fig:1.3

RGB LEDs, or Red-Green-Blue Light Emitting Diodes, are versatile light sources capable of producing a wide range of colors by mixing varying intensities of red, green, and blue light. Here's some key information about RGB LEDs:

Color Mixing: RGB LEDs work on the principle of additive color mixing, where different intensities of red, green, and blue light combine to create a multitude of colors. By adjusting the brightness of each color component, virtually any color in the visible spectrum can be produced.

Components: An RGB LED typically consists of three individual LED chips or diodes - one red, one green, and one blue - housed within a single package. Each LED chip emits light at a

specific wavelength corresponding to its color.

Common Anode/Cathode: RGB LEDs are available in two common configurations: common anode and common cathode. In a common anode configuration, the anode (positive terminal) of all three LED chips is connected together, while in a common cathode configuration, the cathode (negative terminal) is connected together.

Control: To control an RGB LED, the intensity of each color component (red, green, and blue) needs to be adjusted independently. This is typically done using pulse-width modulation (PWM) techniques, where the duty cycle of the PWM signal determines the brightness of each color.

Applications: RGB LEDs are widely used in various applications, including decorative lighting, signage, display panels, stage lighting, and automotive lighting. They are also commonly used in electronics projects for visual indicators, mood lighting, and color-changing effects.

Compatibility with Arduino: RGB LEDs can be easily interfaced with Arduino microcontroller boards for control and programming. Arduino provides built-in PWM functionality, making it straightforward to adjust the brightness of each color component and create dynamic lighting effects.

Power Requirements: RGB LEDs typically have similar power requirements to standard LEDs, with each color component consuming power proportional to its brightness level. However, when using multiple RGB LEDs or driving them at higher intensities, it's important to consider power supply and current limiting requirements.

Programming: Programming RGB LEDs with Arduino involves controlling the PWM signals for each color component using Arduino's digital output pins. By adjusting the PWM duty cycles in the code, you can achieve different colors and lighting effects.

Overall, RGB LEDs offer a flexible and creative lighting solution with endless possibilities for customization and control, making them a popular choice for a wide range of lighting applications and electronics projects.

1.4 OBJECTIVE

The objective of the project is to implement a sustainable and efficient smart traffic signal lighting system by integrating windmill power generation with RGB LED technology. Key objectives include:

Renewable Energy Integration: Utilize mini wind turbines to harness wind energy for power generation, reducing reliance on conventional energy sources and promoting sustainability in urban infrastructure.

Energy-Efficient Lighting: Implement RGB LED traffic signal lights to enhance visibility and efficiency, allowing for dynamic color control and adaptive lighting based on traffic conditions and environmental factors.

Traffic Management Optimization: Improve traffic flow and safety by synchronizing the RGB LED traffic signal lights with traffic patterns, optimizing signal timings, and providing clear and intuitive signaling for motorists and pedestrians.

Technological Innovation: Leverage Arduino microcontroller technology to control and monitor the windmill power generation system and RGB LED lighting system, enabling intelligent decision-making and real-time adjustments for optimal performance.

Cost-Effectiveness and Scalability: Develop a cost-effective and scalable solution that can be deployed across various urban areas, offering long-term economic benefits and scalability to accommodate future growth and expansion.

Environmental Impact Reduction: Reduce carbon emissions and environmental impact by promoting renewable energy usage and energy-efficient lighting technology, contributing to a more sustainable and eco-friendly urban environment.

Community Engagement and Awareness: Raise awareness about renewable energy, energy conservation, and smart urban infrastructure among stakeholders, including local authorities, residents, and transportation agencies, fostering community engagement and support for sustainable development initiatives.

By achieving these objectives, the project aims to demonstrate the feasibility and effectiveness of integrating windmill power generation with RGB LED technology for smart traffic signal lighting, offering a holistic and innovative approach to urban traffic management and sustainability.

CHAPTER 2

LITERATURE SURVEY

Paper 1:Wind power generation: An overview

Salah al Majed, Tetsuo Fujigaki

Wind power generation is power generation that converts wind energy into electric energy. The wind generating set absorbs wind energy with a specially designed blade and converts wind energy to mechanical energy, which further drives the generator rotating and realizes conversion of wind energy to electric energy.
The commonly used wind power generation systems include the direct-driven wind power generating set and the double-fed wind power generating set; the direct-driven wind power generating set is connected to the grid through a full power converter, while the double-fed wind power generating set is connected to the grid through a double-fed converter.

Paper 2: Wind Energy: A Review Paper

Atul Kumar, Muhammad Zafar Ullah Khan, Bishwajeet Pandey
This review paper examined the outline of wind innovation, where the approach depends on standards and down to earth executions. Wind vitality is the second biggest wellspring of sustainable power source after hydropower. It is incredibly reasonable, yet it is discontinuous. Even though the abuse of twist goes back a few centuries, the cutting edge wind vitality industry started amid the oil emergency of the seventies. Most these days wind turbines are onshore; however others are fabricated seaward, more often than not in wind ranches. Since wind vitality is discontinuous, it must be upheld by different wellsprings of power. Wind vitality can be productive as a rule. However, it has not yet accomplished full matrix equality with fossil vitality sources.

Paper 3: Wind energy and sustainable electricity generation: evidence from German

Sakiru Adebola Solarin, Mufutau Opeyemi Bello

Wind energy is one of the renewable energy sources that has been touted to address the challenges of energy security and environmental degradation. This is only attainable if countries with substantial wind energy potential use it in significant proportion to satisfy their energy needs. One promising sector where wind energy can be employed to actualize this potential is the electricity sector. However, the current reality is that fossil fuels still dominate the energy profiles of most economies of the world, including the advanced economies, with wind renewable energy source accounting for a very small proportion of the energy mix. Germany is one of the few countries that offers promising opportunities in deploying wind energy to its full potentials. This study therefore explores the feasibility of substituting wind energy for nuclear energy and other fossil fuels using Germany as a country of focus.

CHAPTER 3

METHODOLOGY

To integrate RGB LEDs into the Arduino-based windmill power generation system for smart traffic signal lighting, you can follow these additional steps:

RGB LED Selection:

Choose RGB LEDs suitable for traffic signal lighting applications, considering factors such as brightness, color accuracy, and energy efficiency.

Ensure that the selected RGB LEDs can be controlled using the Arduino microcontroller board and support the required color mixing capabilities.

Circuit Design:

Design the circuitry to interface the RGB LEDs with the Arduino microcontroller board.

Determine the number and arrangement of RGB LEDs required for each traffic signal light, considering visibility and illumination requirements.

Incorporate appropriate resistors and driver circuits to control the intensity and color of the RGB LEDs.

Arduino Programming:

Write Arduino code to control the RGB LEDs based on traffic signal states and environmental conditions.

Develop algorithms to adjust the brightness and color of the RGB LEDs dynamically, taking into account factors such as traffic flow, time of day, and weather conditions.

Implement logic to synchronize the RGB LED colors with the traffic signal states (e.g., red for stop, green for go, yellow for caution).

Hardware Integration:

Connect the RGB LEDs to the Arduino microcontroller board according to the designed

circuitry.

Test the hardware setup to ensure proper functionality and compatibility with the Arduino-based windmill power generation system.

System Calibration and Testing:

Calibrate the RGB LEDs and fine-tune the control algorithms to achieve the desired color accuracy and intensity.

Conduct comprehensive testing of the RGB LED lighting system under various traffic conditions and lighting scenarios.

Deployment and Installation:

Install the RGB LED modules as part of the traffic signal lighting system at the designated intersections or roadways.

Verify proper alignment and visibility of the RGB LEDs to ensure effective communication with road users.

Integration with Windmill Power Generation System:

Integrate the RGB LED control logic with the existing Arduino code for the windmill power generation system.

Implement communication protocols or interfaces to synchronize the RGB LED colors with the wind turbine operation and energy availability.

Monitoring and Maintenance:

Monitor the RGB LED performance and system health using the same monitoring infrastructure deployed for the windmill power generation system.

Conduct regular maintenance checks to ensure the proper functioning of the RGB LEDs and address any issues promptly.

Performance Evaluation and Optimization:

Evaluate the performance of the RGB LED lighting system in conjunction with the windmill power generation system, analyzing factors such as energy efficiency, visibility, and user satisfaction.

Optimize the RGB LED control algorithms and system parameters based on performance feedback and real-world usage data.

Documentation and Knowledge Sharing:

Document the integration process and operational guidelines for the RGB LED lighting system, including circuit diagrams, code samples, and best practices.

Share insights and experiences with the Arduino and traffic engineering communities to foster collaboration and innovation in smart traffic signal lighting solutions.

By incorporating RGB LEDs into the Arduino-based windmill power generation system, you can enhance the visibility, efficiency, and functionality of smart traffic signal lighting, contributing to safer and more sustainable urban transportation systems.

Working Principle:

The working principle of the proposed project involving windmill power generation for smart traffic signal lighting with Arduino and RGB LEDs can be outlined as follows:

Wind Energy Harvesting:

The project utilizes wind turbines to capture kinetic energy from the wind and convert it into electrical energy through electromagnetic induction.
As the wind blows, it causes the blades of the wind turbine to rotate, generating mechanical energy.
Power Generation and Conversion:

The rotational motion of the wind turbine blades is converted into electrical energy by an alternator or generator mechanism.
The generated electrical energy is typically in the form of alternating current (AC), which is then rectified and converted into direct current (DC) using rectifiers and converters.
Energy Storage and Management:

The DC electrical energy produced by the wind turbine is stored in rechargeable batteries to ensure continuous power supply, especially during periods of low wind or high demand.
Charge controllers regulate the charging and discharging of the batteries to optimize energy storage and prevent overcharging or deep discharge.
Arduino Control and Monitoring:

An Arduino microcontroller board is used to monitor various parameters of the windmill power generation system, such as wind speed, turbine rotation speed, battery voltage, and energy output.
The Arduino collects sensor data and processes it using control algorithms to optimize energy generation, storage, and distribution.
Smart Traffic Signal Lighting Control:

The Arduino microcontroller interfaces with RGB LED modules installed in traffic signal lights to control their brightness and color.
Based on real-time sensor data, traffic conditions, and energy availability, the Arduino dynamically adjusts the brightness and color of the RGB LEDs to convey traffic signals (e.g., red for stop, green for go, yellow for caution).
Integration and Synchronization:

The windmill power generation system and RGB LED traffic signal lighting system are integrated and synchronized to ensure seamless operation and effective communication.
The Arduino orchestrates the interaction between the windmill power generation system, battery storage, RGB LED lighting, and traffic signal control logic.
Adaptive Operation and Optimization:

The system continuously adapts to changing environmental conditions, traffic flow patterns, and energy availability to optimize performance and efficiency.

Control algorithms implemented in the Arduino dynamically adjust the operation of the windmill power generation system and RGB LED traffic signal lighting to meet the energy demands and traffic management needs effectively.

By following this working principle, the proposed project aims to create an energy-efficient, sustainable, and intelligent traffic signal lighting system powered by wind energy and controlled by Arduino technology, with RGB LEDs providing enhanced visibility and functionality for safer and more efficient urban transportation.

CHAPTER 4

4.1 CIRCUIT DIAGRAM OF THE MINI WINDMILL POWER GENERATION MODEL

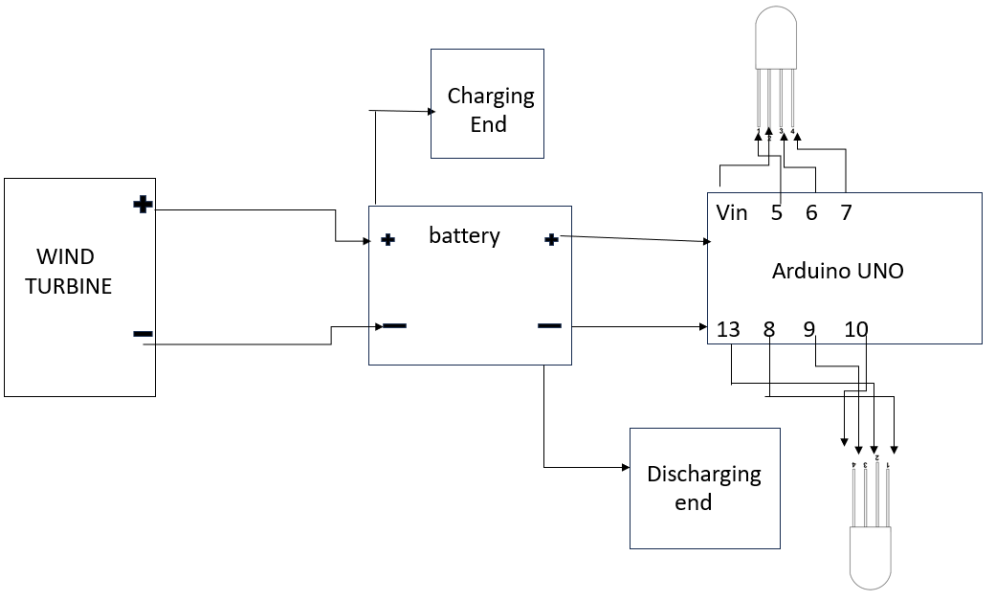

The wind turbine is connected to the charging end of the battery for it to charge from the electricity generated from the battery and the discharging end is connected to the ARDUINO UNO controller and then connected to the rgb leds where the code is written for the leds to imitate a traffic signal and result is shown.

4.2 PROGRAM

```
void setup() {
pinMode(5,OUTPUT);
pinMode(6,OUTPUT);
pinMode(7,OUTPUT);
pinMode(8,OUTPUT);
pinMode(9,OUTPUT);
pinMode(10,OUTPUT);
pinMode(13,OUTPUT);
}
void loop() {
  digitalWrite(13,HIGH);
  digitalWrite(5,LOW);
  digitalWrite(6,HIGH);
```

```
digitalWrite(7,HIGH);
 digitalWrite(8,LOW);
digitalWrite(9,HIGH);
digitalWrite(10,HIGH);
 delay(3000);
digitalWrite(13,HIGH);
digitalWrite(5,LOW);
digitalWrite(6,HIGH);
digitalWrite(7,LOW);
 digitalWrite(8,LOW);
digitalWrite(9,HIGH);
digitalWrite(10,HIGH);
delay(1500);
digitalWrite(13,HIGH);
digitalWrite(5,HIGH);
digitalWrite(6,HIGH);
```

```
digitalWrite(7,LOW);
 digitalWrite(8,LOW);
digitalWrite(9,HIGH);
digitalWrite(10,HIGH);
delay(3000);
digitalWrite(13,HIGH);
digitalWrite(5,LOW);
digitalWrite(6,HIGH);
digitalWrite(7,LOW);
 digitalWrite(8,LOW);
 digitalWrite(9,HIGH);
 digitalWrite(10,LOW);
  delay(1500);
 digitalWrite(13,HIGH);
 digitalWrite(5,LOW);
 digitalWrite(6,HIGH);
```

```
digitalWrite(7,HIGH);
 digitalWrite(8,HIGH);
digitalWrite(9,HIGH);
digitalWrite(10,LOW);
 delay(3000);
digitalWrite(13,HIGH);
digitalWrite(5,LOW);
digitalWrite(6,HIGH);
digitalWrite(7,HIGH);
 digitalWrite(8,LOW);
digitalWrite(9,HIGH);
digitalWrite(10,LOW);
 delay(1500); }
```

CHAPTER 5

EXPENDITURE STATEMENT

Name of the components	Qty	Cost of the components
Arduino uno	1	360
DC GENERATOR	1	300
Rgb led	2	8
Batteries	2	600
Battery Holder	1	70
Total		1338

RESULT

wonder

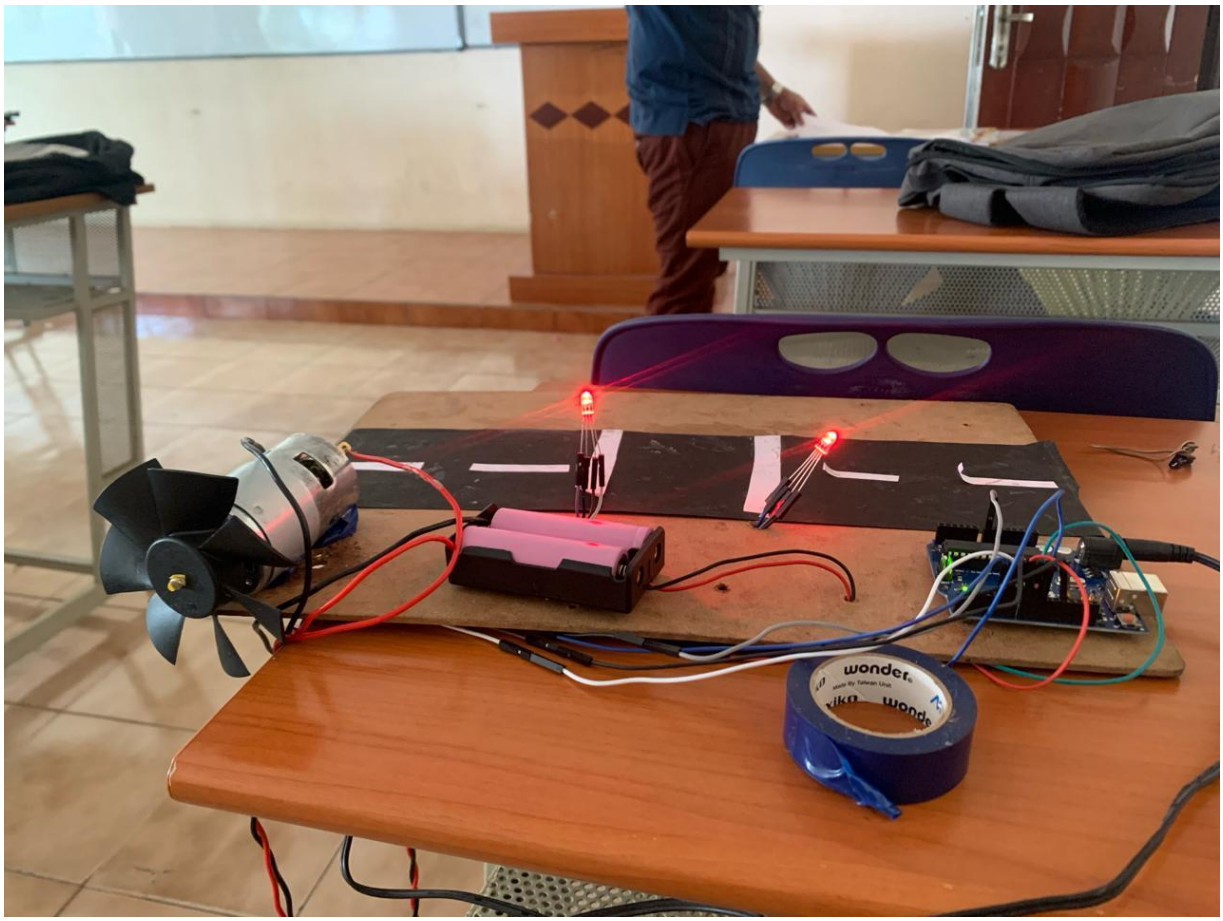
wonder

CONCLUSION

In conclusion, the integration of windmill power generation, RGB LEDs, and Arduino microcontroller technology presents a promising solution for enhancing smart traffic signal lighting systems. By combining renewable energy generation with advanced lighting control capabilities, this project aims to address the energy efficiency, sustainability, and functionality requirements of modern urban infrastructure.

Through the development and deployment of an Arduino-based windmill power generation system, coupled with RGB LED traffic signal lights, several key outcomes are achieved:

Energy Efficiency and Sustainability: By harnessing wind power for electricity generation, the project reduces reliance on traditional energy sources and mitigates carbon emissions, contributing to a more sustainable and environmentally friendly transportation infrastructure.

Cost-effectiveness: The use of renewable energy sources and energy-efficient LED lighting technology helps reduce operational costs associated with traffic signal lighting, offering long-term cost savings and economic benefits to municipalities and communities.

Enhanced Traffic Safety and Visibility: The incorporation of RGB LEDs into traffic signal lights enables dynamic color control and improved visibility, enhancing communication with road users and contributing to safer and more effective traffic management.

Technological Innovation: The integration of Arduino microcontroller technology allows for intelligent control and optimization of the traffic signal lighting system, enabling adaptive responses to changing traffic conditions, weather patterns, and energy availability.

Community Engagement and Collaboration: By sharing insights, experiences, and best practices with the Arduino and traffic engineering communities, this project fosters collaboration and knowledge sharing, driving innovation and continuous improvement in smart urban infrastructure solutions.

In summary, the implementation of windmill power generation for smart traffic signal lighting, augmented with RGB LEDs and Arduino technology, represents a significant step towards creating more sustainable, efficient, and intelligent transportation systems. By leveraging renewable energy sources and advanced lighting control capabilities, this project contributes to the development of smarter, greener, and safer cities for future generations.

REFERENCE

Wind power generation: An overview: published in Modern electric power system one, September 2010**.** Salah al Majed, Tetsuo Fujigaki

Windmill Power Generation Using Mult-Generator and Single Rotor (Horizontal and Vertical Blade): July 2012, Siva Sakti Velan S, Muthukumaran Gunasegaran

Wind energy and sustainable electricity generation: evidence from German: September 15, 2021. Sakiru Adebola Solarin,Mufutau Opeyemi Bello

THANK YOU